LONG SEAMS

| COURSE | ORIENTATION | ORIENTATION |
|---|---|---|
| 1(LEFT) | 45° | 299° |
| 2 | 90° | 270° |
| 3 | 96° | 276° |
| 4 | 45° | 299° |

*HOR – LEFT TO RIGHT

Ship loose items:
(1) Set of Spare gaskets for Noz. B1, D1, K, M

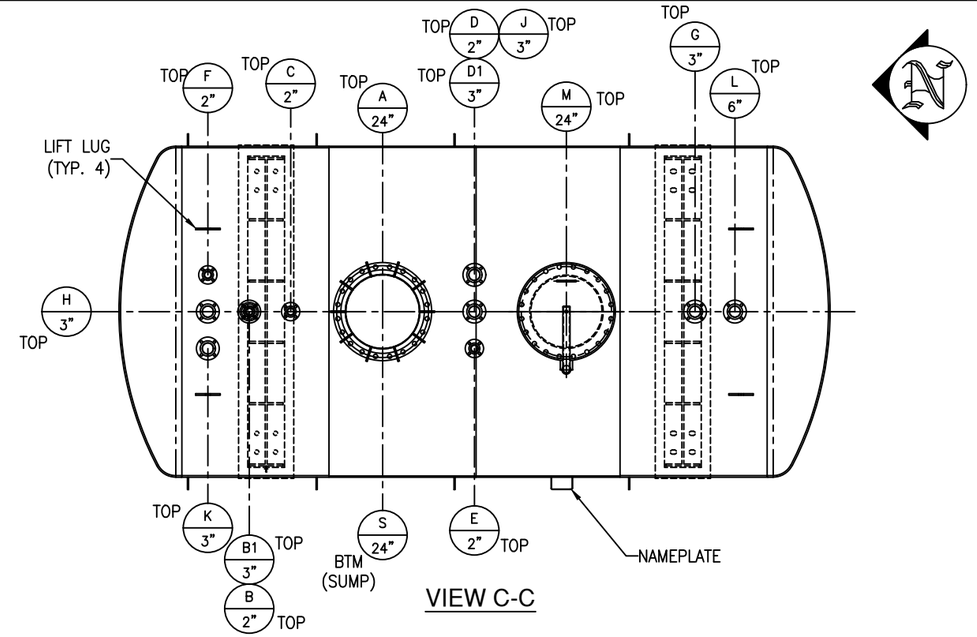


VIEW C-C

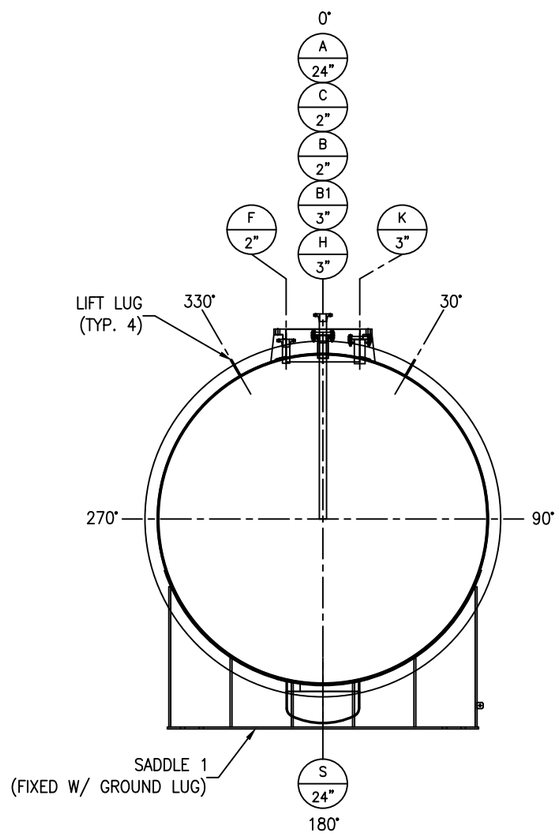


VIEW A-A

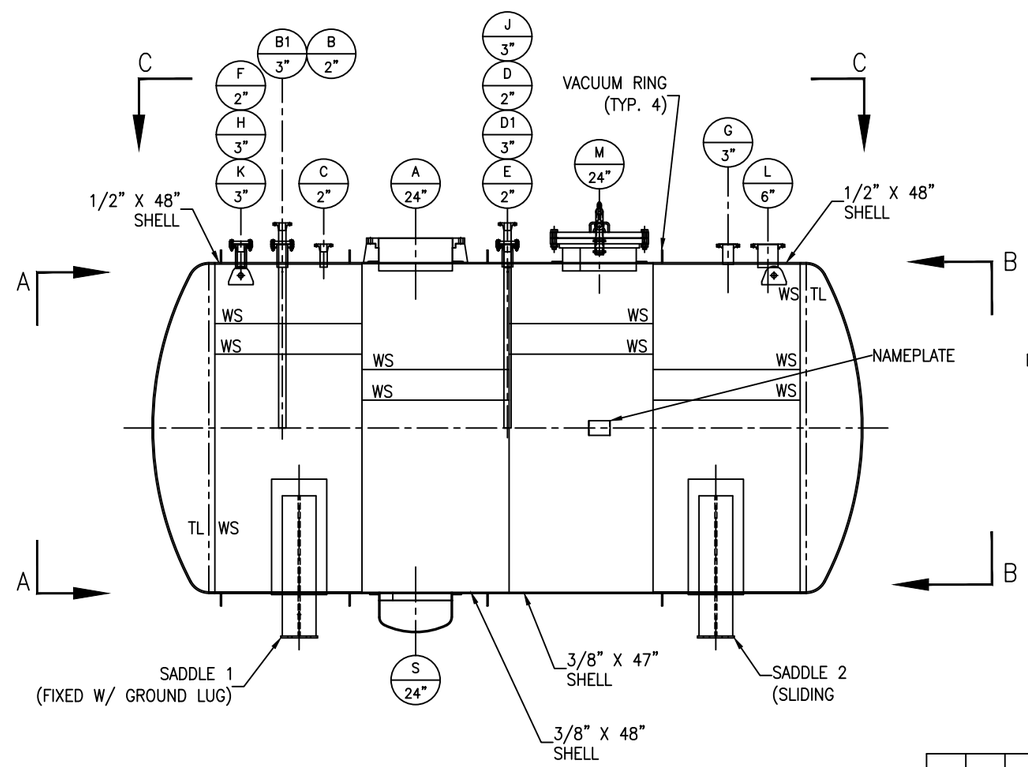


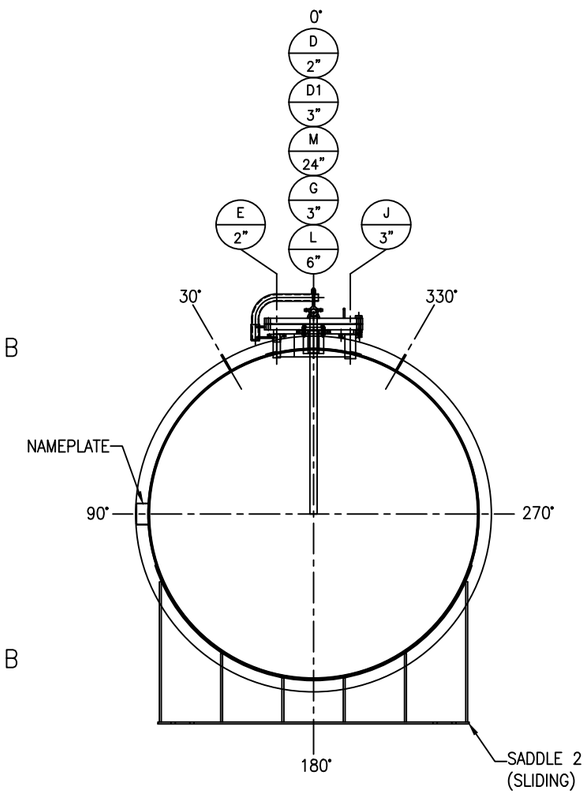


VIEW B-B

| REV | D.BY | C.BY | DATE | DESCRIPTION |
|---|---|---|---|---|
| | | | | AS BUILT |
| 2 | AD | – | 7/11/25 | CERTIFIED |
| 1 | AD | RS | 7/7/25 | APPROVAL REV 1 |
| 0 | AD | RS | 6/17/25 | APPROVAL |

⚠ REVISIONS

Savannah Tank & Equipment Corp.
1517 Telfair Road, Savannah, GA 31415
(912) 233-8902

DRAWN BY: AD
CHK'D BY: RS
APPROVED BY: NP
SCALE: 3/8" = 1'-0"

CHROMASCAPE LLC
CHLOROSULFONIC ACID BULK STORAGE TANK
EQUIP. #708-036
CUST. PO # P09313

DRAWING NO.: 054-25-1 SHT 1 OF 6 REV. SET 2

LONG SEAMS

| COURSE | ORIENTATION | ORIENTATION |
|---|---|---|
| 1(LEFT) | 45° | 299° |
| 2 | 90° | 270° |
| 3 | 96° | 276° |
| 4 | 45° | 299° |

*HOR – LEFT TO RIGHT

Ship loose items:
(1) Set of Spare gaskets for Noz. B1, D1, K, M

*NOTE: ALL ELEVATIONS ARE PULLED FROM WELD SEAM FOR EASE OF FABRICATION

NOTE: SEE SHT #5 FOR VACUUM RING LOCATION

NOTE: TANK MUST BE DRAINED AND DRIED COMPLETELY AFTER HYDROTEST.

NOTE 7: X-RAY: SPOT X-RAY ON C/S & L/S AND NOZZLE D1, E AND J PER CODE.

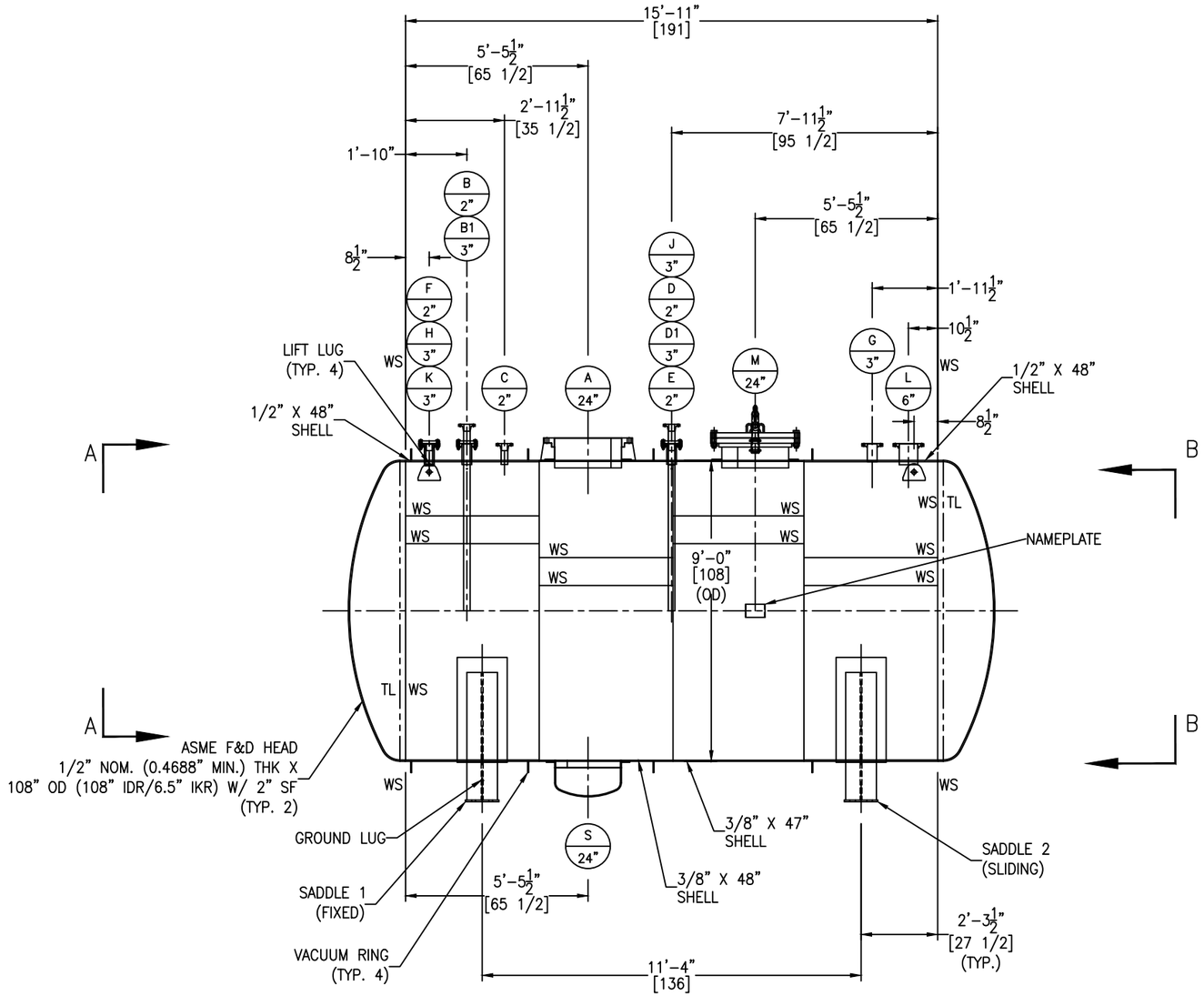


GM-02 SA-30
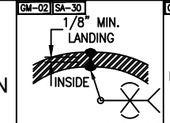

SHELL THK. 5/16"-3/4"
FIGURE NO. 10

GM-02 SA-30
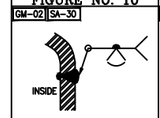

FOR HEADS
FIGURE NO. 11

GM-02 GT-11
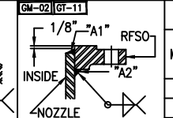

FIGURE NO. 1

GM-02 GT-11
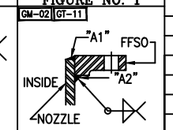

1 FIGURE NO. 1A

GM-02 GT-11
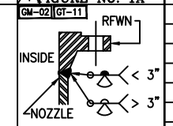

FIGURE NO. 2

GM-02 GT-11
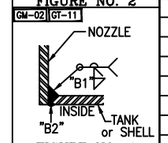

FIGURE NO. 4

GM-02 GT-11
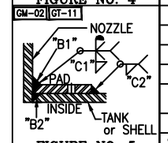

FIGURE NO. 5

GM-02 GT-11
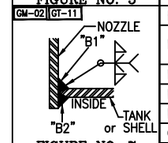

FIGURE NO. 7

GM-02 GT-11
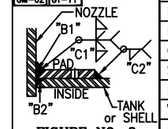

FIGURE NO. 8

## NOZZLE SCHEDULE

| MARK | SERVICE | SIZE | RATING | TYPE / STYLE | NECK SCHED. | PROJECTION EXT. (E) | PROJECTION INT. (MIN.) | WELD FIGURE | REPAD SIZE (WIDTH X THK.) | WELD SIZE "A1" | "A2" | "B1" | "B2" | "C1" | "C2" |
|---|---|---|---|---|---|---|---|---|---|---|---|---|---|---|---|
| A | PUMP MOUNTING | 24" | 125# | FFSO | 3/8" | 8" | 1" | 1A,8 | 3" X 3/8" | 1/4 | 9/16 | 3/8 | 1/8 | 3/8 | 1/4 |
| B | TRUCK LIQUID INLET | 2" | 150# | RFWN | 40S | SEE DWG | SEE DWG | 2,7 | – | – | – | 3/16 | 1/8 | – | – |
| B1 | BASE NOZZLE FOR NOZ. B | 3" | 150# | RFSO W/BLIND | 40S | 6" | 1" | 1,7 | – | 1/4 | 5/16 | 1/4 | 1/8 | – | – |
| C | TRUCK VAPOR RECOVERY | 2" | 150# | RFWN | 40S | 6" | 1" | 2,7 | – | – | – | 3/16 | 1/8 | – | – |
| D | BLOWBACK LIQUID INLET | 2" | 150# | RFWN | 40S | SEE DWG | SEE DWG | 2,7 | – | – | – | 3/16 | 1/8 | – | – |
| D1 | BASE NOZZLE FOR NOZ. D | 3" | 150# | RFSO W/BLIND | 40S | 6" | 1" | 1,7 | – | 1/4 | 5/16 | 1/4 | 1/8 | – | – |
| E | LIQUID INLET-THERMAL RELIEF | 2" | 150# | RFWN | 40S | 6" | 1" | 2,7 | – | – | – | 3/16 | 1/8 | – | – |
| F | NITORGEN INLET | 2" | 150# | RFWN | 40S | 6" | 1" | 2,7 | – | – | – | 3/16 | 1/8 | – | – |
| G | VENT TO SCRUBBER | 3" | 150# | RFSO | 40S | 6" | – | 1,4 | – | 1/4 | 5/16 | 1/4 | 1/8 | – | – |
| H | LEVEL SWITCH | 3" | 150# | RFSO | 40S | 6" | 1" | 1,7 | – | 1/4 | 5/16 | 1/4 | 1/8 | – | – |
| J | THERMOWELL | 3" | 150# | RFSO | 40S | 6" | 1" | 1,7 | – | 1/4 | 5/16 | 1/4 | 1/8 | – | – |
| K | SPARE | 3" | 150# | RFSO W/BLIND | 40S | 6" | 1" | 1,7 | – | 1/4 | 5/16 | 1/4 | 1/8 | – | – |
| L | EMERGENCY RELIEF | 6" | 150# | RFSO | 40S | 6" | 1" | 1,7 | – | 1/4 | 7/16 | 3/8 | 1/8 | – | – |
| M | MANWAY | 24" | 150# | RFSO W/DAVIT | 3/8" | 8" | 1" | 1,8 | 3 1/2" X 3/8" | 1/4 | 9/16 | 3/8 | 1/8 | 3/8 | 1/4 |
| S | SUMP | 24" | – | ROLLED PLATE W/PIPE CAP | 3/8" | 2 1/4" | – | 5 | 3" X 3/8" | – | – | 3/8 | 1/8 | 3/8 | 1/4 |

## MATERIALS OF CONSTRUCTION

| | VESSEL |
|---|---|
| SHELL | SA240-316/316L |
| HEADS | SA240-316/316L |
| NOZZLE NECKS & PIPE CAP | SA312-316/316L WLD & SA240-316/316L & SA403-316/316L WPB |
| NOZZLE FLANGES | SA182F-316/316L |
| MANWAY NECKS | SA240-316/316L |
| MANWAY FLANGES | SA182F-316/316L |
| GASKETS | TEFLON ENVELOPE |
| BOLTS/STUDS | SA193-B7 (ZINC PLATED) |
| NUTS | SA194-2H (ZINC PLATED) |
| REPADS | SA240-304/304L |
| COUPLINGS | – |
| SUPPORTS/HOLD DOWNS | SA240-304/304L |
| LIFTING LUGS | SA240-304/304L |
| VACUUM RINGS | SA240-304/304L |
| INSULATION RINGS | – |
| GROUND LUG | SA240-304/304L |
| BAFFLE | – |
| LADDER | – |
| TANK CLIPS (LADDER) | – |
| HANDRAIL | – |
| HANDRAIL CLIPS | – |
| PLATFORM | – |
| PLATFORM CLIPS | – |
| DIPTUBE SUPPORT | – |
| JACKET SHELL | – |
| JACKET HEADS | – |
| JACKET NOZZLE NECKS | – |
| JACKET NOZZLE FLANGES | – |

## DESIGN DATA

| | VESSEL |
|---|---|
| DESIGN AND FAB. CODE | ASME |
| CERT. STAMP REQ'D. | YES |
| DESIGN PRESSURE | 20 PSIG/ FV |
| DESIGN TEMPERATURE | 300° F |
| MIN. DESIGN METAL TEMP. | -20° F @ 20 PSIG |
| OPERATING PRESSURE | ATM. |
| OPERATING TEMPERATURE | AMB. |
| JOINT EFFICIENCY HEADS | 0.85 |
| JOINT EFFICIENCY SHELL | 0.85 |
| CORROSION ALLOWANCE | 1/16" (SHELLS, HEADS & SUMP ONLY) |
| SPECIFIC GRAVITY | 1.76 |
| EARTHQUAKE ZONE | Ss = (1.930) S1 = (0.450) |
| WIND LOAD | 143 MPH |
| STRESS RELIEF | NOT REQ'D |
| RADIOGRAPHIC EXAM | SPOT (SEE NOTE 7) |
| DYE PENETRANT EXAM | NOT REQ'D |
| MAGNETIC PARTICLE EXAM | NOT REQ'D |
| HYDROSTATIC TEST | 26 PSIG / GAUGE #11 |
| PNEUMATIC TEST | – |
| JKT DESIGN AND FAB. CODE | – |
| JKT CERT. STAMP REQ'D. | – |
| JKT DESIGN PRESSURE | – |
| JKT DESIGN TEMPERATURE | – |
| JKT MIN. DESIGN METAL TEMP. | – |
| JKT OPERATING PRESSURE | – |
| JKT OPERATING TEMPERATURE | – |
| JKT JOINT EFFICIENCY HEADS | – |
| JKT JOINT EFFICIENCY SHELL | – |
| JKT HYDRO TEST | – |

## VESSEL FINISH

| | |
|---|---|
| INTERIOR WELD TREATMENT: | SAV TANK STANDARD |
| EXTERIOR WELD TREATMENT: | SAV TANK STANDARD |
| SAV TANK FINISHING STANDARD: | SEE NOTE 6 |
| INSULATION: | N/A |
| PAINTING: | N/A |

## VESSEL CAPACITY AND WEIGHTS

| | |
|---|---|
| OPERATING CAPACITY | 7,500 GAL. |
| FULL CAPACITY | 8,450 GAL. |
| EMPTY SHIPPING WEIGHT | 18,300 LBS. |
| WEIGHT FULL OF WATER | 88,900 LBS. |
| WEIGHT FULL OF PRODUCT | 142,600 LBS. |

ASME SECT. VIII, DIV. 1
2023 EDITION

ENG. _____ DATE: _____

Q.C. _____ DATE: _____

A.I. _____ DATE: _____

This drawing is issued for customer approval. please review, make approval changes (if any) in red. check the appropriate box, sign & date.

- ☐ Approval – no changes. Please proceed with fabrication.
- ☐ Approved as noted. Please proceed with fabrication
- ☐ Not approved. Please make changes and resubmit.

Customer signature _____ Date _____

## GENERAL NOTES

1.) COVER ALL FLANGES, OPENINGS & MACHINED SURFACES PRIOR TO SHIPMENT UNLESS OTHERWISE NOTED.
2.) BOLT HOLES TO STRADDLE 0° & 180° UNLESS OTHERWISE NOTED.
3.) REPADS TO HAVE (1) ø1/4" NPT TELL-TALE HOLES FOR PNEUMATIC TESTING AT 2 PSIG FOR PRESSURE RETAINING PARTS. ALL OTHER REPADS TO HAVE (1) ø1/4" WEEP HOLE AT LOWEST POINT ON PAD.
4.) ASME CODE VESSELS TO BE IN ACCORDANCE WITH UG-80 & UG-81. TOLERANCES: +/- 1/8" FOR DIMENSIONS AND +/- 2 DEGREES FOR ORIENTATIONS.
5.) ASME MATERIALS TO CONFORM TO THE FOLLOWING: FLANGES – B16.5, FITTINGS – B16.9 & COUPLINGS – B16.11.
6.) PICKLE ALL EXTERIOR WELDS. PASSIVATE INTERIOR & EXTERIOR OF VESSEL.
7.) X-RAY: SPOT X-RAY ON C/S & L/S AND NOZZLE D1 AND E PER CODE.

## REVISIONS

| REV | D.BY | C.BY | DATE | DESCRIPTION |
|---|---|---|---|---|
| | | | | AS BUILT |
| 2 | AD | – | 7/11/25 | CERTIFIED |
| 1 | AD | RS | 7/7/25 | APPROVAL REV 1 |
| 0 | AD | RS | 6/17/25 | APPROVAL |


Savannah Tank & Equipment Corp.
1517 Telfair Road, Savannah, GA 31415
(912) 233-8902


DRAWN BY: AD
CHK'D BY: RS
APPROVED BY: NP
SCALE: 3/8" = 1'-0"

CHROMASCAPE LLC
CHLOROSULFONIC ACID BULK STORAGE TANK
EQUIP. #708-036
CUST. PO # P09313

DRAWING NO.: 054-25-2 SHT 2 OF 6 REV. SET 2

LONG SEAMS

| COURSE | ORIENTATION | ORIENTATION |
|---|---|---|
| 1(LEFT) | 45° | 299° |
| 2 | 90° | 270° |
| 3 | 96° | 276° |
| 4 | 45° | 299° |

*HOR – LEFT TO RIGHT

Ship loose items:
(1) Set of Spare gaskets for Noz. B1, D1, K, M

NOTE 7: X-RAY: SPOT X-RAY ON C/S & L/S AND NOZZLE D1, E & J PER CODE.

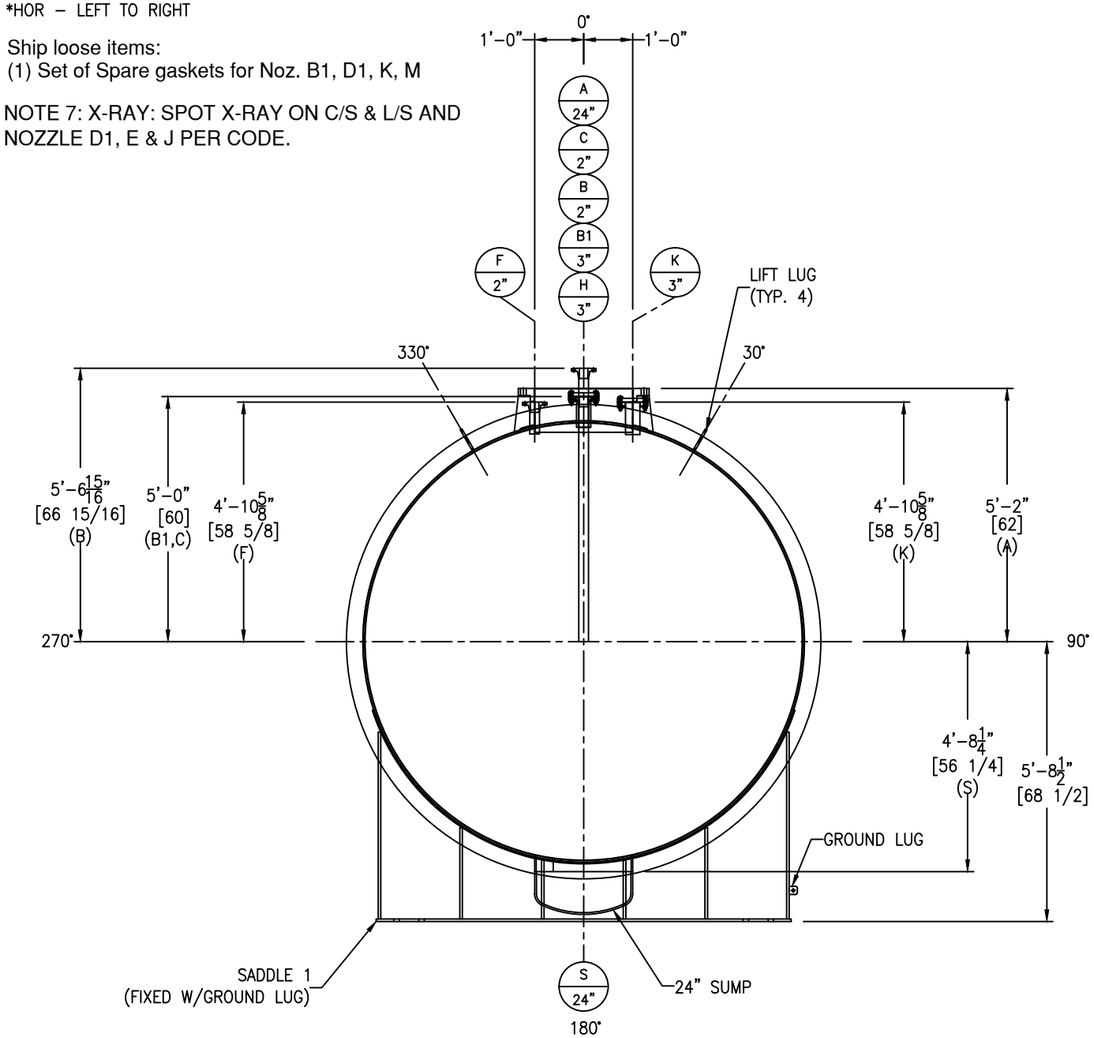


VIEW A-A

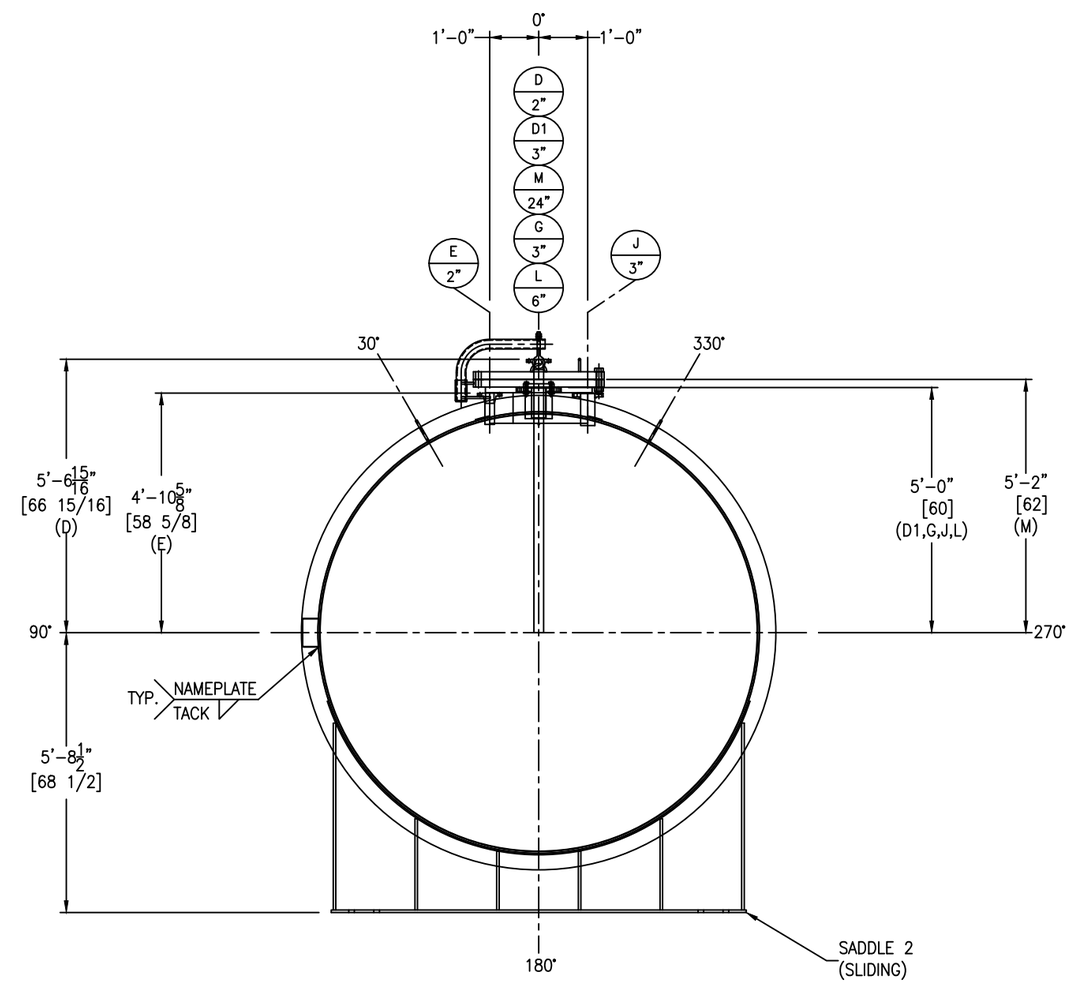


VIEW B-B

| REV | D.BY | C.BY | DATE | DESCRIPTION |
|---|---|---|---|---|
| | | | | AS BUILT |
| 2 | AD | – | 7/11/25 | CERTIFIED |
| 1 | AD | RS | 7/7/25 | APPROVAL REV 1 |
| 0 | AD | RS | 6/17/25 | APPROVAL |

REVISIONS

Savannah Tank & Equipment Corp.
1517 Telfair Road, Savannah, GA 31415
(912) 233–8902

DRAWN BY: AD
CHK'D BY: RS
APPROVED BY: NP
SCALE: 1/2" = 1'–0"

CHROMASCAPE LLC
CHLOROSULFONIC ACID BULK STORAGE TANK
EQUIP. #708–036
CUST. PO # PO9313

DRAWING NO.: 054–25–3 SHT 3 OF 6 REV. SET 2

FC-14

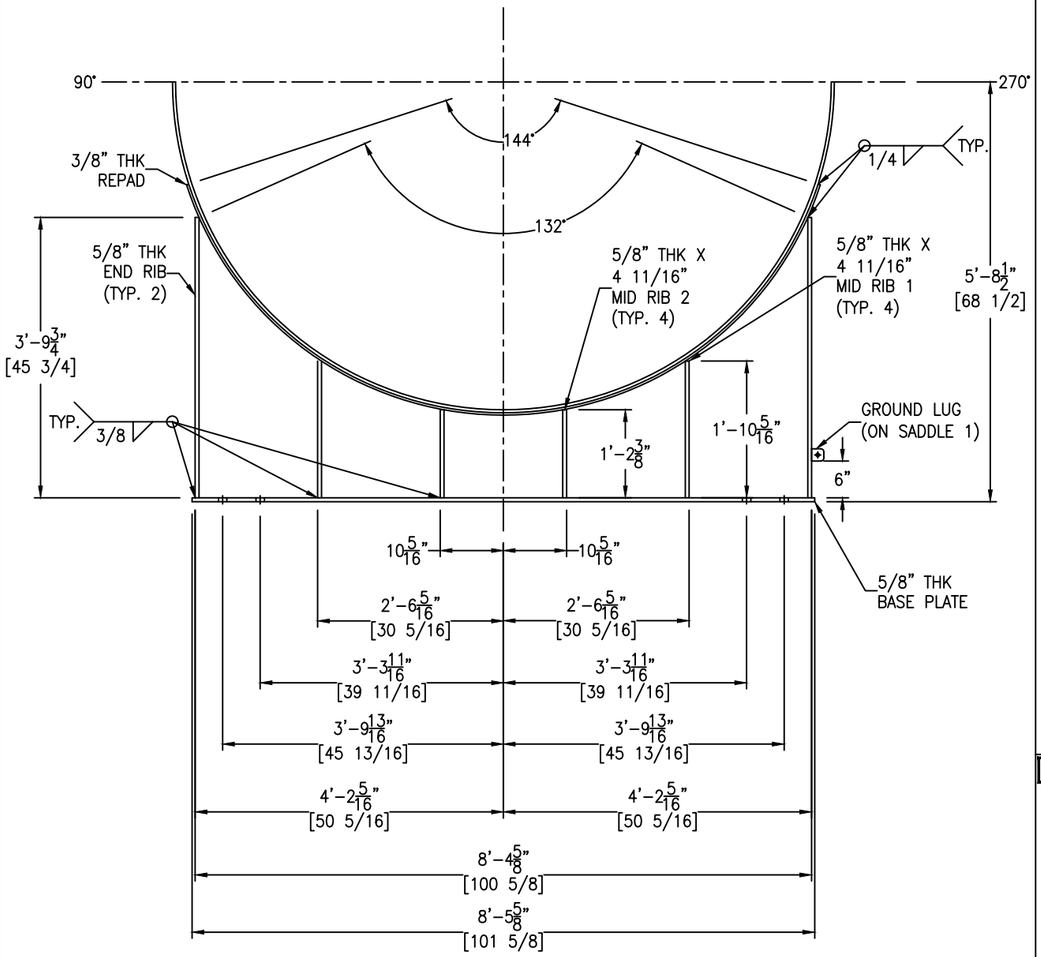


SADDLE DETAIL

(2 REQ'D) SCALE: 3/4" = 1'-0"

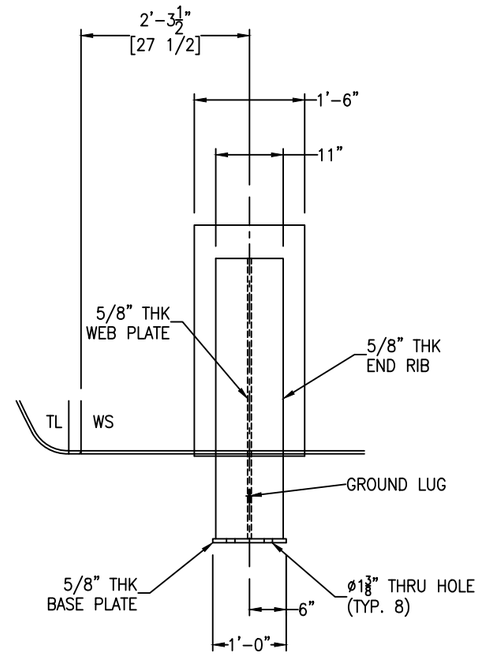


SADDLE 1 DETAIL

SCALE: 3/4" = 1'-0"

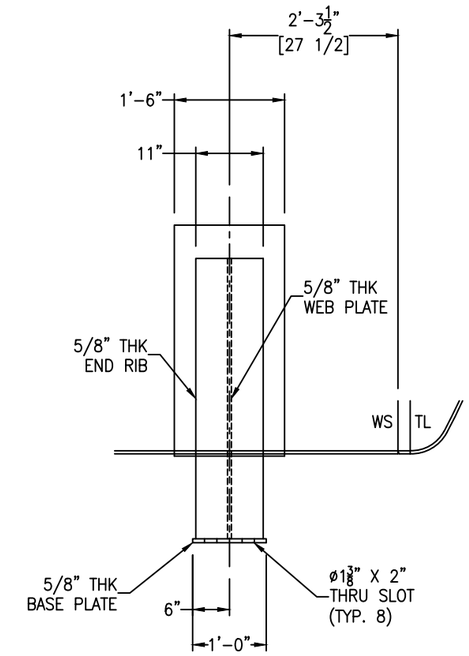


SADDLE 2 DETAIL

SCALE: 3/" = 1'-0"

FC-14

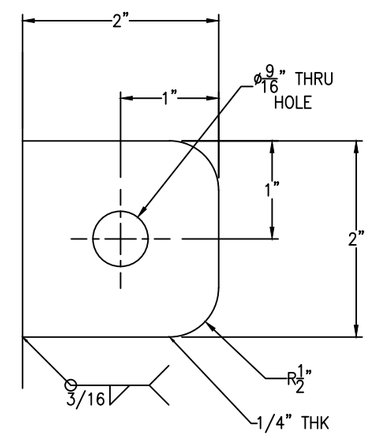


GROUND LUG DETAIL

SCALE: 1'-0" = 1'-0"

FC-14

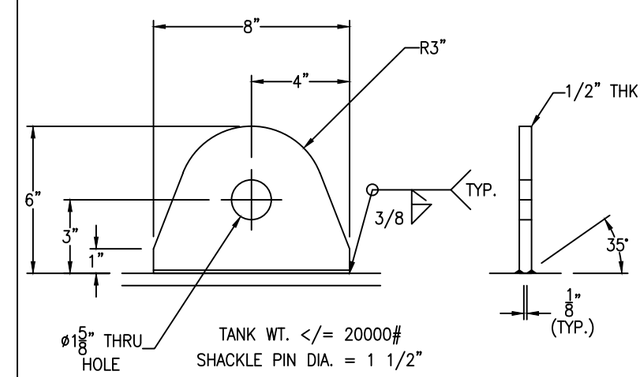


LIFT LUG DETAIL

(4 REQ'D) SCALE: 3" = 1'-0"

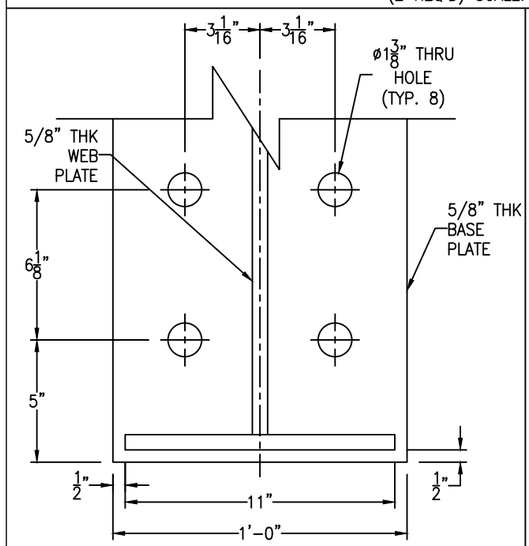


SADDLE 1 DETAIL

SCALE: 3" = 1'-0"

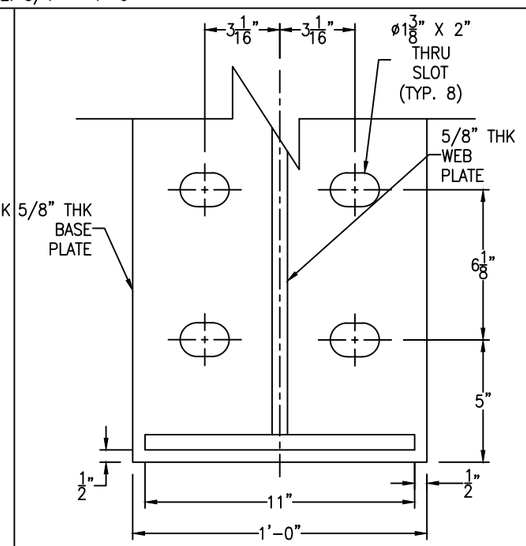


SADDLE 2 DETAIL

SCALE: 3" = 1'-0"

Bolting for blinds

B1: (4) 5/8"-11 NC x 3" HH BOLT
(4) 5/8"-11 NC HH NUT
(1+1) 3" 150# RING GASKET (TEFLON ENVELOPE)

D1: (4) 5/8"-11 NC x 3" HH BOLT
(4) 5/8"-11 NC HH NUT
(1+1) 3" 150# RING GASKET (TEFLON ENVELOPE)

K: (4) 5/8"-11 NC x 3" HH BOLT
(4) 5/8"-11 NC HH NUT
(1+1) 3" 150# RING GASKET (TEFLON ENVELOPE)

| REV | D.BY | C.BY | DATE | DESCRIPTION |
|---|---|---|---|---|
| | | | | AS BUILT |
| 2 | AD | – | 7/11/25 | CERTIFIED |
| 1 | AD | RS | 7/7/25 | APPROVAL REV 1 |
| 0 | AD | RS | 6/17/25 | APPROVAL |

⚠1 REVISIONS

**Savannah Tank & Equipment Corp.**
1517 Telfair Road, Savannah, GA 31415
(912) 233-8902

DRAWN BY: AD
CHK'D BY: RS
APPROVED BY: NP
SCALE: 3/8" = 1'-0"

CHROMASCAPE LLC
CHLOROSULFONIC ACID BULK STORAGE TANK
EQUIP. #708-036
CUST. PO # P09313

DRAWING NO.: 054-25-4 SHT 4 OF 6 REV. SET 2

GM-02

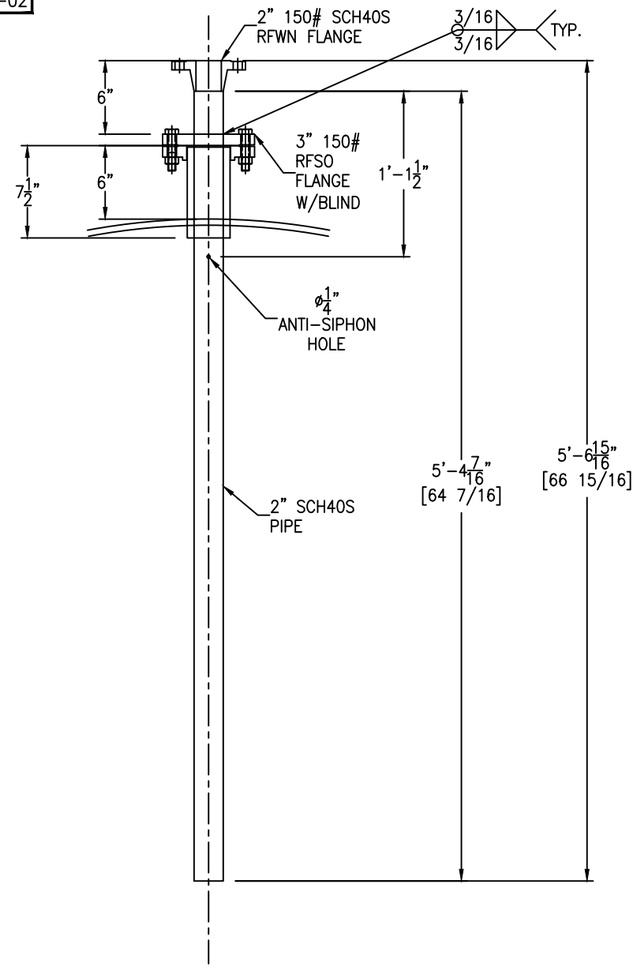


NOZZLE B & B1 DETAIL

SCALE: 1 1/2" = 1'-0"

GM-02

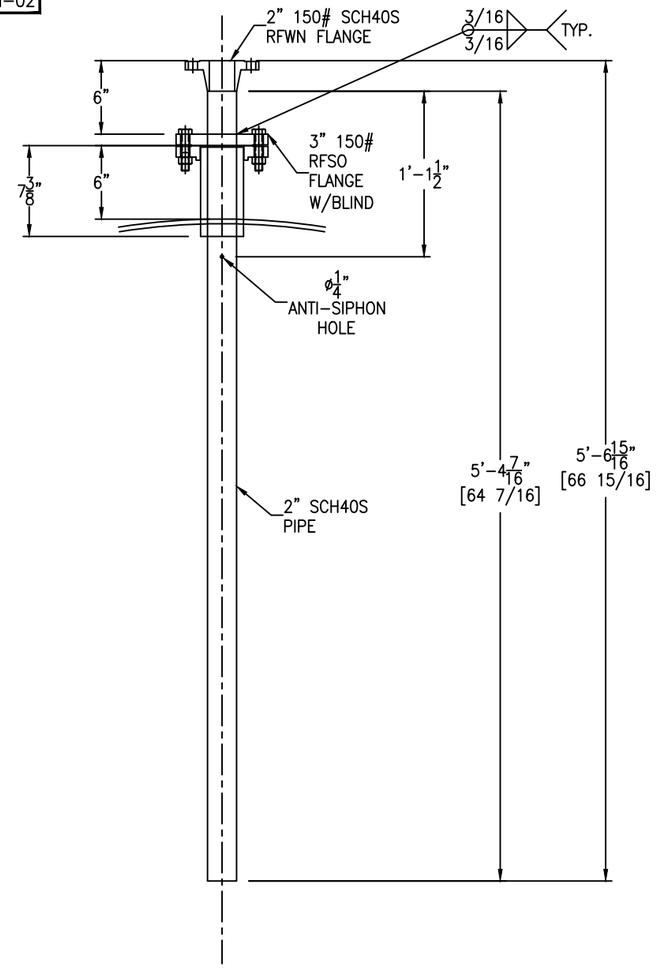


NOZZLE D & D1 DETAIL

SCALE: 1 1/2" = 1'-0"

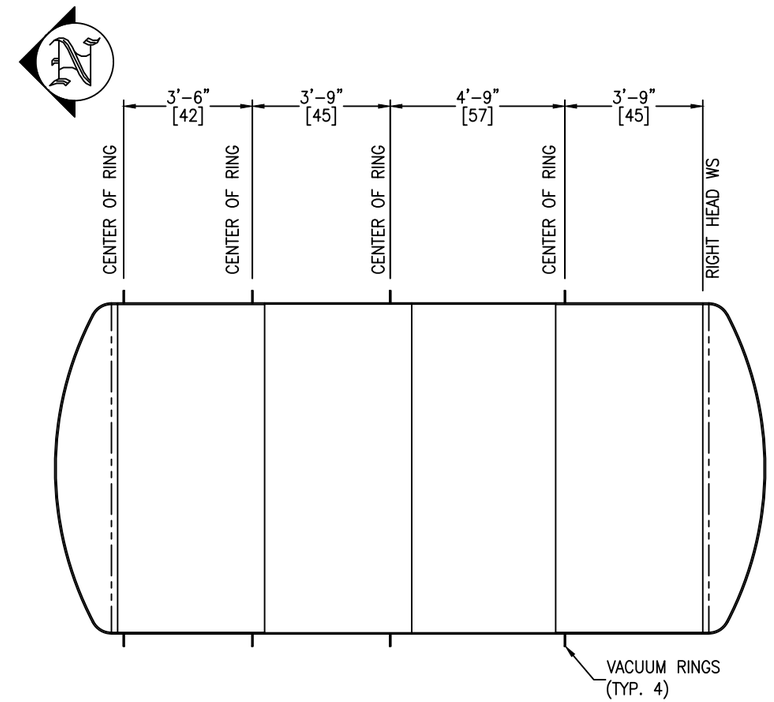


VACUUM RING LOCATION DETAIL

SCALE: 3/8" = 1'-0"

GM-02

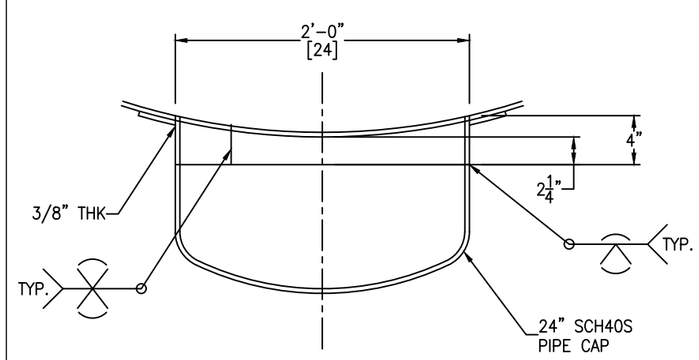


***SUMP IS FLUSH TO INSIDE OF SHELL***

**SEE SHEET #1 FOR SUMP TO SHELL WELD**

SUMP DETAIL

SCALE: 1 1/2" = 1'-0"

FC-14

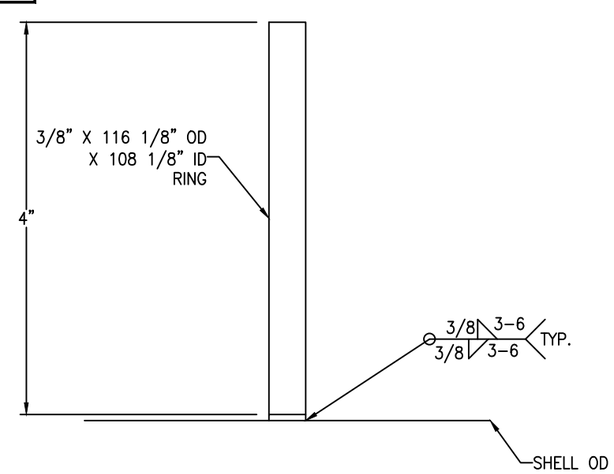


VACUUM RING DETAIL

(4 REQ'D) SCALE: 1'-0"" = 1'-0"

GM-02

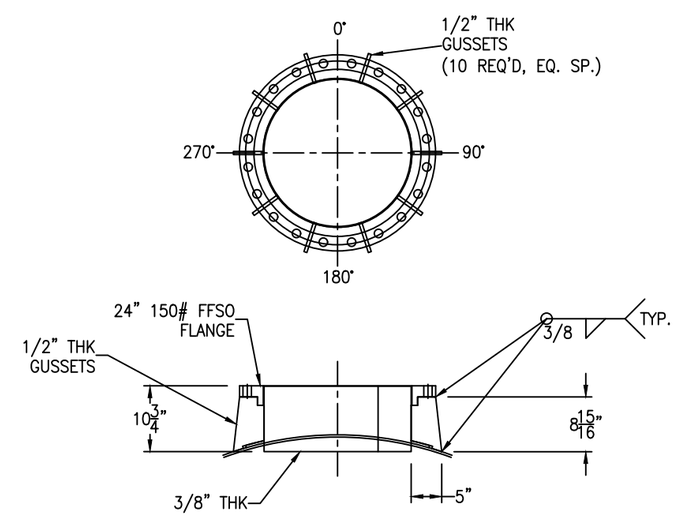


NOZZLE A GUSSET DETAIL

SCALE: 3/4" = 1'-0"

| REV | D.BY | C.BY | DATE | DESCRIPTION |
|---|---|---|---|---|
| | | | | AS BUILT |
| 2 | AD | – | 7/11/25 | CERTIFIED |
| 1 | AD | RS | 7/7/25 | APPROVAL REV 1 |
| 0 | AD | RS | 6/17/25 | APPROVAL |

⚠ REVISIONS


Savannah Tank & Equipment Corp.
1517 Telfair Road, Savannah, GA 31415
(912) 233-8902


DRAWN BY: AD
CHK'D BY: RS
APPROVED BY: NP
SCALE: 3/8" = 1'-0"

CHROMASCAPE LLC
CHLOROSULFONIC ACID BULK STORAGE TANK
EQUIP. #708-036
CUST. PO # P09313

DRAWING NO.: 054-25-5 SHT 5 OF 6 REV. SET 2

FC-14

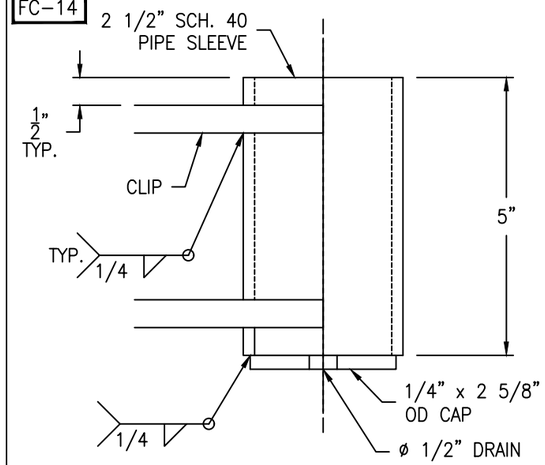


SLEEVE DETAIL

(1 REQ'D) SCALE: 6" = 1'-0"

FC-14

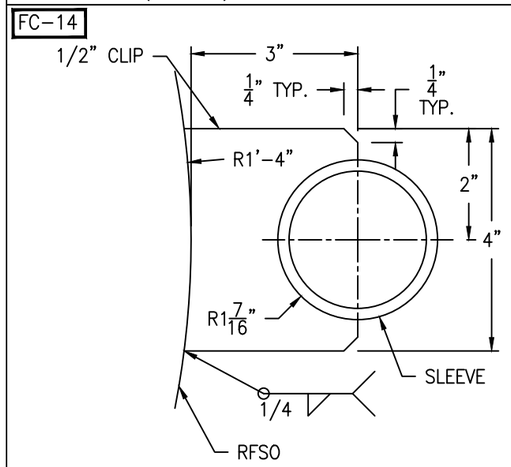


UPPER CLIP DETAIL

(1 REQ'D) SCALE: 6" = 1'-0"

FC-14

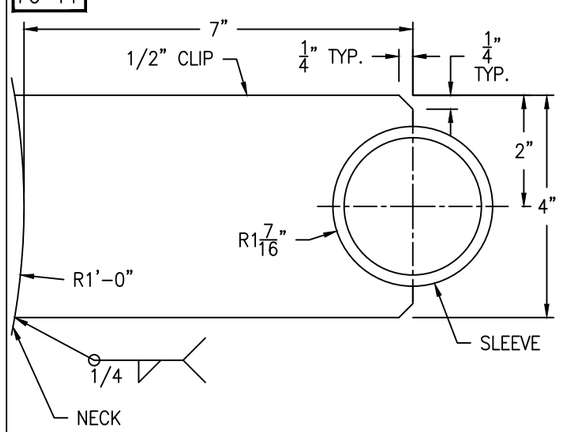


LOWER CLIP DETAIL

(1 REQ'D) SCALE: 6" = 1'-0"

GM-02

Bolting for blind
(20) 1 1/4-7 NC x 7" FULL THREADED STUD
(40) 1 1/4-7 NC HH NUT
(1+1) 24" 150# RING GASKET x 1/8" (TEFLON ENVELOPE)

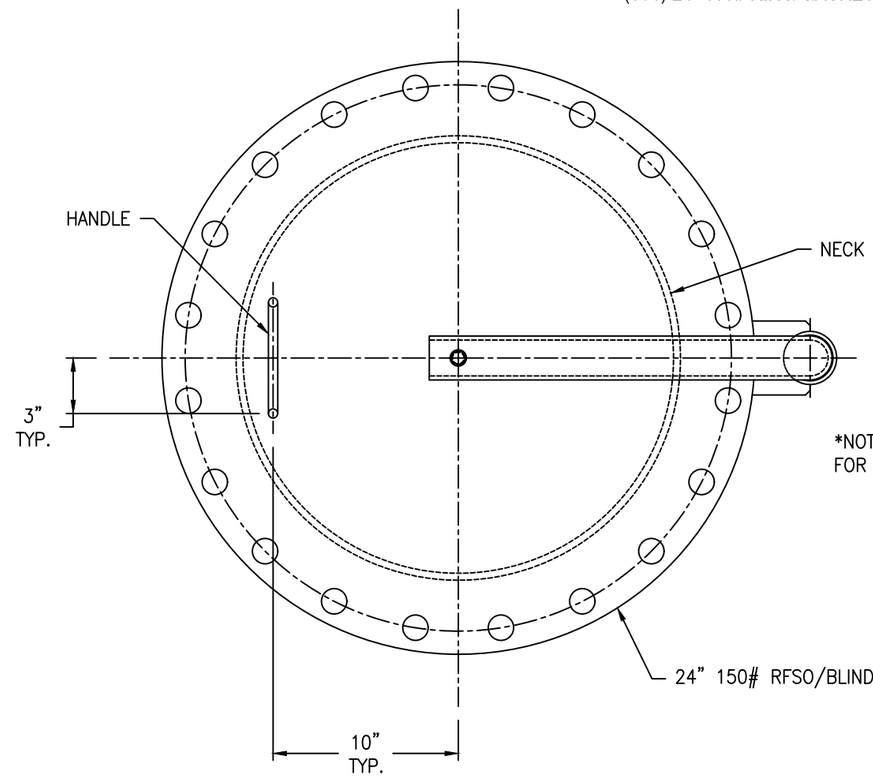


*NOTE: SEE VESSEL ORIENTATION FOR DAVIT LOCATION

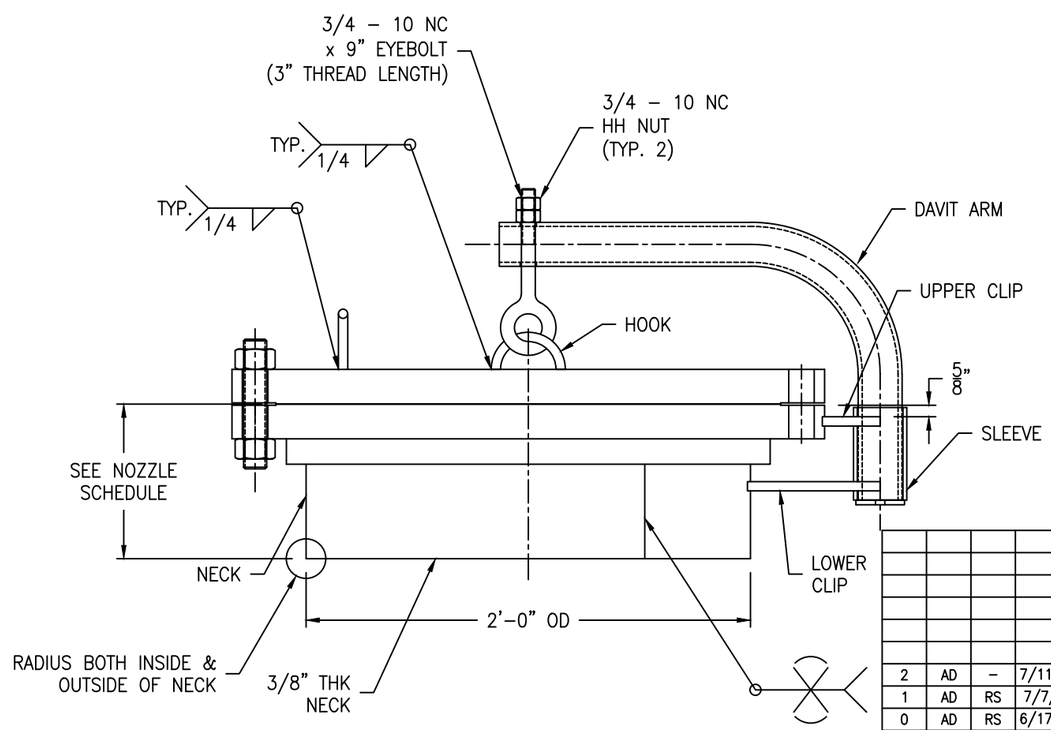


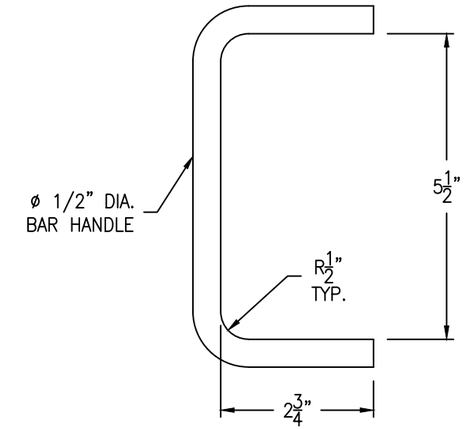


HANDLE DETAIL

(1 REQ'D) SCALE: 6" = 1'-0"

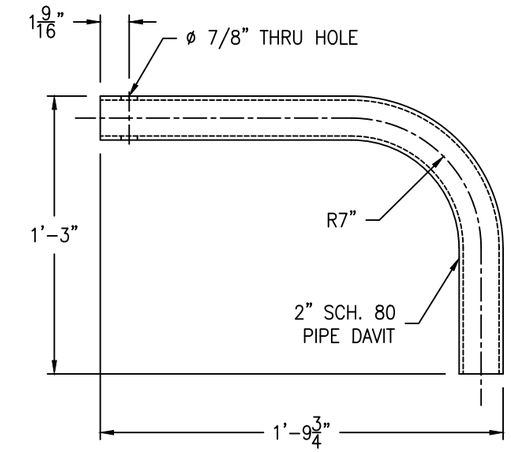


DAVIT ARM DETAIL

(1 REQ'D) SCALE: 2" = 1'-0"

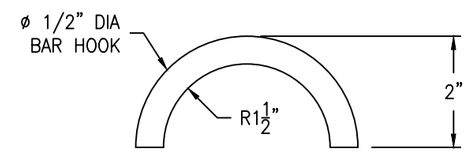


HOOK DETAIL

(1 REQ'D) SCALE: 6" = 1'-0"

| REV | D.BY | C.BY | DATE | DESCRIPTION |
|---|---|---|---|---|
| | | | | AS BUILT |
| 2 | AD | – | 7/11/25 | CERTIFIED |
| 1 | AD | RS | 7/7/25 | APPROVAL REV 1 |
| 0 | AD | RS | 6/17/25 | APPROVAL |

1 REVISIONS


Savannah Tank & Equipment Corp.
1517 Telfair Road, Savannah, GA 31415
(912) 233-8902


DRAWN BY: AD
CHK'D BY: RS
APPROVED BY: NP
SCALE: 2" = 1'-0"

CHROMASCAPE LLC
CHLOROSULFONIC ACID BULK STORAGE TANK
EQUIP. #708-036
CUST. PO # P09313

DRAWING NO.: 054-25-6 SHT 6 OF 6 REV. SET 2